Data sheet

# IE-CD-V14MRJ-FJ

**Weidmüller Interface GmbH & Co. KG**
Klingenbergstraße 26
D-32758 Detmold
Germany

www.weidmueller.com

Junction box / coupling, design for FreeCon PushPull plug-in connectors ver. 14 according to IEC 61076-3-117

## General ordering data

| | |
|---|---|
| Version | Junction box, FreeCon, RJ45 module, IP65 |
| Order No. | 1068880000 |
| Type | IE-CD-V14MRJ-FJ |
| GTIN (EAN) | 4032248824021 |
| Qty. | 1 items |

# IE-CD-V14MRJ-FJ

**Weidmüller Interface GmbH & Co. KG**
Klingenbergstraße 26
D-32758 Detmold
Germany

www.weidmueller.com

## Technical data

### Approvals

| | |
|---|---|
| Approvals | c UL us LISTED |
| ROHS | Conform |
| UL File Number Search | UL Website |
| Certificate no. (cULus) | E316369 |

### Dimensions and weights

| | | | |
|---|---|---|---|
| Depth | 100 mm | Depth (inches) | 3.937 inch |
| Height | 52 mm | Height (inches) | 2.0472 inch |
| Width | 41 mm | Width (inches) | 1.6142 inch |
| Net weight | 316.8 g | | |

### Temperatures

| | | | |
|---|---|---|---|
| Storage temperature | | Operating temperature | -40 °C...70 °C |
| Installation temperature | | | |

### Environmental Product Compliance

| | |
|---|---|
| RoHS Compliance Status | Compliant with exemption |
| RoHS Exemption (if applicable/known) | 6c |
| REACH SVHC | Lead 7439-92-1 |
| SCIP | 67cf1078-beca-4687-860b-dc475a6ec24a |

### General data

| | | | |
|---|---|---|---|
| Colour | silver | Housing main material | Aluminium profile, Cover: die-cast zinc, painted |
| Protection degree | IP65 | Wiring | PROFINET |

### General standards

| | | | |
|---|---|---|---|
| Connector standard | IEC 61076-3-117 Var. 14, IEC 60603-7-5 | UL standard for communication accessories | UL 1863 |
| Application-specific communication cable facilities | PROFINET installation instructions | IP protection classes | IEC 60529 |
| Certificate no. (cULus) | E316369 | | |

### Technical data RJ45 module

| | | | |
|---|---|---|---|
| Wire cross-section, finely stranded, max. (AWG) | AWG 22 | Wire cross-section, finely stranded, min. (AWG) | AWG 26 |
| Wiring | PROFINET | Category (RJ45 module) | Cat.5 (ISO/IEC 11801) |
| Plugging cycles (RJ45 module) | 750 | Insulation resistance (RJ45 module) | > 500 MΩ |
| Shielding (RJ45 module) | 360° shield contact | Connection 2 (RJ45 module) | RJ45 |
| Housing base material (RJ45 module) | Zinc diecast | Sheath diameter, max. (RJ45 module) | 10 mm |
| Contact resistance (RJ45 module) | ≤ 20 mΩ | Plugging force (RJ45 module) | ≤ 30 N |
| Current capacity (RJ45 module) | 1 A | Dielectric strength, contact - shielding (RJ45 module) | ≤ 1500 V DC |
| Dielectric strength, contact - contact (RJ45 module) | ≤ 1000 V DC | Colour (RJ45 module) | silver |

# IE-CD-V14MRJ-FJ

**Weidmüller Interface GmbH & Co. KG**
Klingenbergstraße 26
D-32758 Detmold
Germany

www.weidmueller.com

## Technical data

| | | | |
|---|---|---|---|
| Connection 1 (RJ45 module) | IDC | Contact surface (RJ45 module) | Gold over nickel |
| Sheath diameter, min. (RJ45 module) | 5 mm | | |

### Classifications

| | | | |
|---|---|---|---|
| ETIM 8.0 | EC002597 | ETIM 9.0 | EC002597 |
| ETIM 10.0 | EC002597 | ECLASS 14.0 | 27-44-03-18 |
| ECLASS 15.0 | 27-44-03-18 | | |

**IE-CD-V14MRJ-FJ**

**Weidmüller Interface GmbH & Co. KG**
Klingenbergstraße 26
D-32758 Detmold
Germany

www.weidmueller.com

## Drawings

### Dimensioned drawing

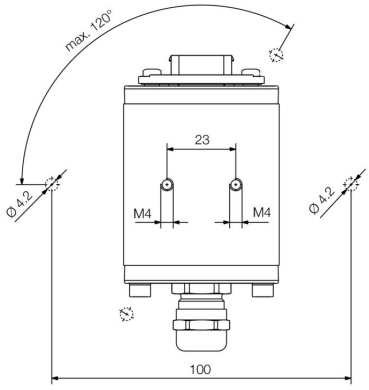


Bottom view

### Dimensioned drawing

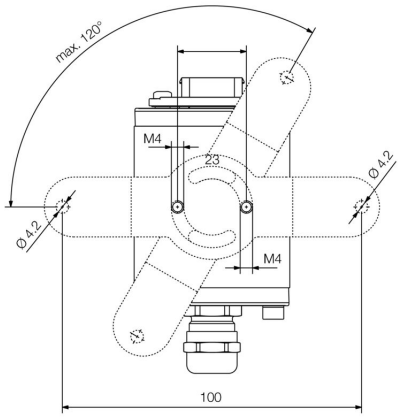


Bottom view with mounting foot

### Dimensioned drawing

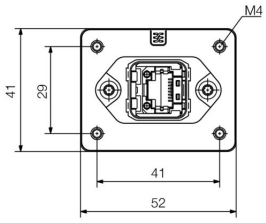


Front view

### Dimensioned drawing

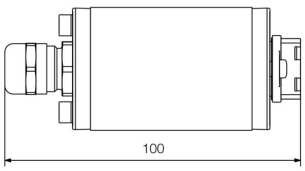


Side view