Data sheet

VSSC6 CL FG 12VDC 0.5A

Weidmüller Interface GmbH & Co. KG
Klingenbergstraße 26
D-32758 Detmold
Germany

www.weidmueller.com

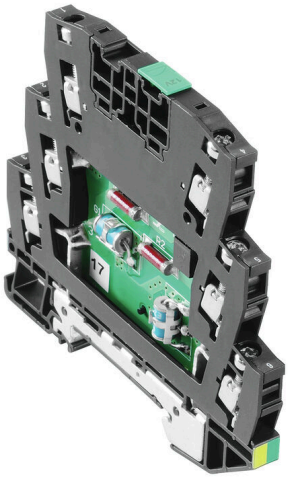

Overvoltage coupling along the conductor path may disturb or destroy sensitive signal inputs. It is important to provide protection in the immediate vicinity of I&C devices. Weidmüller's broad product range for the I&C sector offers products in a 2-piece, pluggable design and modular terminals for tension clamp or screw connection. These products are suitable for both binary and analogue signals. Weidmüller also offers other designs with integrated components such as gas discharge tubes or varistors. VARITECTOR stands for flexible and variable surge protection by Weidmüller, tested according to product standard IEC61643-21. The VARITECTOR series can be used in applications according to IEC 61643-22 / VDE 0845-3 for classes C1, C2, C3 and D1. The VARITECTOR SPC, SSC and MCZ OVP product families optimally combine electrical and mechanical properties. Size and easy handling play an important role. This surge protection is suited for confined spaces in industrial and process automation as well as in building automation applications.

General ordering data

Version	Surge protection for instrumentation and control, Surge protection for measurement and control
Order No.	1064260000
Type	VSSC6 CL FG 12VDC 0.5A
GTIN (EAN)	4032248829620
Qty.	10 items

VSSC6 CL FG 12VDC 0.5A

Weidmüller Interface GmbH & Co. KG
Klingenbergstraße 26
D-32758 Detmold
Germany

www.weidmueller.com

Technical data

Approvals

Approvals	CSAEX
ROHS	Conform
UL File Number Search	UL Website
Certificate No. (UL)	E311081

Dimensions and weights

Depth	81 mm	Depth (inches)	3.189 inch
Height	88.5 mm	Height (inches)	3.4842 inch
Width	6.2 mm	Width (inches)	0.2441 inch
Net weight	41.2 g		

Temperatures

Storage temperature	-40 °C...80 °C	Operating temperature	-40 °C...70
Humidity	5...96 %		

Probability of failure

SIL in compliance with IEC 61508	3	MTTF	3936 a
SFF	93.28 %	λges	29
PFH in 1*10-9 per hour	1.95		

Environmental Product Compliance

RoHS Compliance Status	Compliant with exemption
RoHS Exemption (if applicable/known)	7a, 7cI
REACH SVHC	Lead 7439-92-1
SCIP	71e97bb7-979f-4330-94c0-20c629bb05e3

Rated data UL

Certificate No. (UL)	E311081	UL certificate	UL Zertifikat - PDF/ E311081VOL1SEC3.pdf (application/pdf)

CSA protection data

Gas group D	IIA	Gas groups A, B	IIC
Input-current, max. II	500 mA	Gas group C	IIB
Internal inductance, max. LI	0 µH	Internal capacity, max. CI	1 nF
Input voltage, max. Ui	15 V		

General data

Optical function display	No	Segment	Measurement - Monitoring - Setting
Version	Surge protection for measurement and control	Design	Terminal
UL 94 flammability rating	V-0	Colour	black
Protection degree	IP20	Mounting rail	TS 35
Isolating function	No		

VSSC6 CL FG 12VDC 0.5A

Weidmüller Interface GmbH & Co. KG
Klingenbergstraße 26
D-32758 Detmold
Germany

www.weidmueller.com

Technical data

Insulation coordination acc. to EN 50178

Surge voltage category	III	Pollution severity	2

Rated data IEC / EN

Number of poles	1	Rated voltage (DC)	12 V
Rated current IN	500 mA	Protection level on output side Wire-wire 1 kV/µs, typically	30 V
Voltage type	DC	Fuse protection	0.5 A
Volume resistance	1.8 Ω 10 %	Standards	IEC 61643-21, HART-compatible
Lightning test current Iimp (10/350 µs)	0.5 kA	Discharge current, max. (8/20 µs)	10 kA
Dielectric strength at FG against PE	≥ 500 V	Requirements category acc. to IEC 61643-21	C2, C3, D1
Insertion loss	250 MHz	Max. continuous voltage, Uc (DC)	15 V
Surge current-carrying capacity D1	0,5 kA	Surge current-carrying capacity C3	50 A
Pulse-reset capacity	≤ 20 ms	Signal transmission properties (-3 dB)	≤ 700 kHz
Lightning test current, Iimp (10/350 µs) Wire-PE	0.5 kA	Overload - failure mode	Modus 2
Rated load current IL	500 mA	Discharge current In (8/20µs) wire-wire	2.5 kA
Discharge current Imax (8/20µs) wire-PE	5 kA	Discharge current Imax (8/20µs) wire-wire	5 kA
Surge current-carrying capacity C2	2.5 kA		

Further details of approvals

GOST certificate	GOST-Zertifikat - PDF/7950_n1-n4.pdf (application/pdf)

Connection data

Stripping length	10 mm	Type of connection	Screw connection
Tightening torque, min.	0.5 Nm	Tightening torque, max.	0.8 Nm
Clamping range, min.	0.5 mm²	Clamping range, max.	4 mm²
Wire cross-section, solid, min.	0.5 mm²	Wire cross-section, solid, max.	6 mm²
Conductor cross-section, flexible, AEH (DIN 46228-1), min.	0.5 mm²	Conductor cross-section, flexible, AEH (DIN 46228-1), max.	4 mm²
Connection cross-section, stranded, min.	0.5 mm²	Connection cross-section, stranded, max.	4 mm²

Electrical data

Voltage type	DC

General data

Number of poles	1	Protection degree	IP20
Colour	black		

Ratings IECEx/ATEX/cUL

cUL certificate	cUL Certificate - pdf/VSSC.PDF (application/pdf)

VSSC6 CL FG 12VDC 0.5A

Weidmüller Interface GmbH & Co. KG
Klingenbergstraße 26
D-32758 Detmold
Germany

www.weidmueller.com

Technical data

Important note

Product information	Mode 2: State where the voltage-limiting part of the SPD was short-circuited due to a very low impedance within the SPD. The line is inoperable, but the measuring equipment is still protected by means of a short-circuit.

Classifications

ETIM 8.0	EC000943	ETIM 9.0	EC000943
ETIM 10.0	EC000943	ECLASS 14.0	27-17-15-01
ECLASS 15.0	27-17-15-01		

Tender specification sheets

Long specification	Surge protection in a one piece, 6.2 mm wide DIN rail module for a floating-ground driven signal circuit with 12 V DC, 2-wire technology. A current loop with max. 0.5 A can be protected here. When the terminal is fitted, there is a simultaneous sparkover gap created to the high-impedance earth between the mounting rail (earth) and the reference potential (ground) of the protective switch. Optical identification of the terminal based on the type of protected switching and the voltage level. The terminal can be labelled or marked.	Short specification	Surge protection in a one piece, 6.2 mm wide DIN rail module for a floating-ground driven signal circuit with 2-wire technology and a potential-free earth cable. Version: 12V DC

VSSC6 CL FG 12VDC 0.5A

Weidmüller Interface GmbH & Co. KG
Klingenbergstraße 26
D-32758 Detmold
Germany

www.weidmueller.com

Drawings

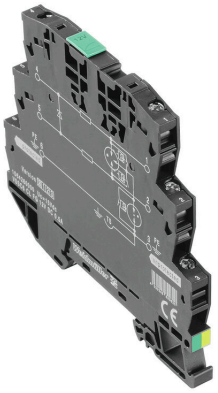

Similar to illustration

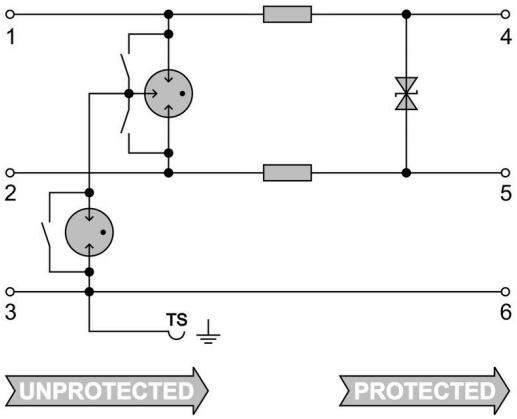

Circuit diagram

VSSC6 CL FG 12VDC 0.5A

Weidmüller Interface GmbH & Co. KG
Klingenbergstraße 26
D-32758 Detmold
Germany

www.weidmueller.com

Accessories

Accessories (end plates)

End plates (AP) for the VSSC product series in light blue and black

General ordering data

Type	AP VSSC6	Version
Order No.	1063110000	VSSC, End plate
GTIN (EAN)	4032248947553	
Qty.	50 ST	

Blank

The Dekafix (DEK) marker is the universal marker for all conductor and plug-in connectors as well as for electronic sub-assemblies. The system is ideal for short number sequences and covers a wide range of ready-printed markers.
Strips for fast installation in only one work step. The printing is easy to read, rich in contrast and available in various widths.

- Large range of ready-to-use markers
- Strips for fast installation
- Terminal markers, suitable for all Weidmüller cable connectors
- Available as blank MultiCard or with standard printing

For custom printing: Please send us a file of our labeling software M-Print PRO or M-Print PRO Online (without installation) for your labeling specifications.

General ordering data

Type	DEK 5/5 MC NE WS	Version
Order No.	1609801044	Dekafix, Terminal marker, 5 x 5 mm, Pitch in mm (P): 5.00
GTIN (EAN)	4008190397111	Weidmueller, white
Qty.	1000 ST	

SnapMark

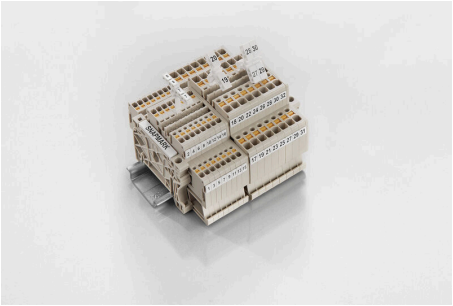

SnapMark - this tag carrier has been developed especifically for the I-series double-level terminal IDK 1.5N. The flexible pivot mechanism allows cross-connections to be easily installed or removed. It can hold four DEK 5 labelling tags or two WS 10/5 Middle connector markers.

VSSC6 CL FG 12VDC 0.5A

Weidmüller Interface GmbH & Co. KG
Klingenbergstraße 26
D-32758 Detmold
Germany

www.weidmueller.com

Accessories

General ordering data

Type	SNAPMARK I	Version
Order No.	1805880000	Group markers, Terminal marker, 23 x 5 mm, Pitch in mm (P): 5.00
GTIN (EAN)	4032248273614	Weidmueller, white
Qty.	50 ST	