Data sheet

SAIL-M12WM12W-CD-7.5A

Weidmüller Interface GmbH & Co. KG
Klingenbergstraße 26
D-32758 Detmold
Germany

www.weidmueller.com



The most reliable way of achieving connections between two I/O slaves or between the control and one I/O subscriber is by way of pre-assembled cables. The line of cables covers PROFIBUS, CANopen, DeviceNetTM, EtherCAT and Ethernet.

General ordering data

Version	Bus line, Connecting line, M12 / M12, Number of poles: 5, 7.5 m, pin, 90° - socket 90°, Shielded: Yes, LED: No, Sheath material: PUR, Halogen: No
Order No.	1062150750
Type	SAIL-M12WM12W-CD-7.5A
GTIN (EAN)	4050118456875
Qty.	1 items
Delivery status	This article will no longer be available in the future.
Last order date	2026-09-30T00:00:00+02:00
Alternative product	SAIL-M12WM12W-CD-10A

Data sheet

SAIL-M12WM12W-CD-7.5A

Weidmüller Interface GmbH & Co. KG
Klingenbergstraße 26
D-32758 Detmold
Germany

www.weidmueller.com

Technical data

Approvals

Approvals	
ROHS	Conform
UL File Number Search	UL Website
Certificate no. (cULus)	E307231

Dimensions and weights

Length	7.5 mm	Length (inches)	0.2953 inch
Net weight	700 g		

Environmental Product Compliance

RoHS Compliance Status	Compliant with exemption
RoHS Exemption (if applicable/known)	6c
REACH SVHC	Lead 7439-92-1
SCIP	1c533b66-fcff-4da5-b89f-fd55fbf5cb55

Technical specifications for cable

Cable length	7.5 m	Sheathing colour	violet
Resistance to oils	EN 50363-10-2	Suitable for cable carriers	Yes
Core cross-section	0.34 mm²	Number of wires	5
Shielded	Yes	Halogen	No
Insulation	PE	Acceleration	7 m/s²
Bending radius, min., moving	10 x cable diameter	Bending cycles	5 Mio
Wire cross section (Print/Online)	2 x 0.34 mm² + 2 x 0.22 mm²	Resistance to spread of flame	in accordance with IEC 60332-1-2, In accordance with UL1581 UL/ CUL FT1
Speed	180 m/min	Sheath material	PUR
Cable length configurable	No	Type is hybrid cable	Yes
Irradiation crosslinked	No	Welding spark resistance	No
Colour coding	red, black, white, blue	Resistant to welding beads	No
Temperature range, moving	-20...80 °C	Number of poles	5
Outside diameter	6.9 mm ± 0.3 mm		

General technical data

Coding	A-coded	Connection thread	M12 / M12
Contact surface	Gold-plated	LED	No
Version	pin, 90° - socket 90°	Housing main material	PUR
Contact material	CuZn35PB2	Nominal voltage	125 V
Nominal current	4 A	Protection degree	IP67
Plugging cycles	≥ 100	Pollution severity	3
jumpered	No	Threaded ring material	Brass, nickel-plated
Temperature range of housing	-25...+80 °C	Tightening torque	M12: 0.8 - 1.2 Nm

Electrical properties

Nominal voltage	125 V

SAIL-M12WM12W-CD-7.5A

Weidmüller Interface GmbH & Co. KG
Klingenbergstraße 26
D-32758 Detmold
Germany

www.weidmueller.com

Technical data

General standards

Connector standard	IEC 61076-2-101	Certificate no. (cULus)	E307231

Plug, left

Plug left	M12, A-coded, Number of poles: 5, IP67, male contact, angled 0°, plug, shielded

Plug, right

Plug right	M12, A-coded, Number of poles: 5, IP67, female contact, angled 0°, plug, shielded

Classifications

ETIM 8.0	EC002599	ETIM 9.0	EC002599
ETIM 10.0	EC002599	ECLASS 14.0	27-06-03-08
ECLASS 15.0	27-06-03-07		

SAIL-M12WM12W-CD-7.5A

Weidmüller Interface GmbH & Co. KG
Klingenbergstraße 26
D-32758 Detmold
Germany

www.weidmueller.com

Drawings

Dimensioned drawing

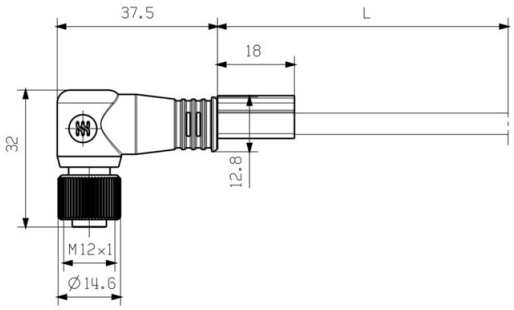

Male, angled

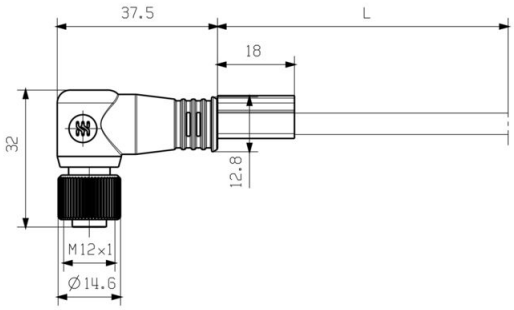

Socket angled

Pole scheme

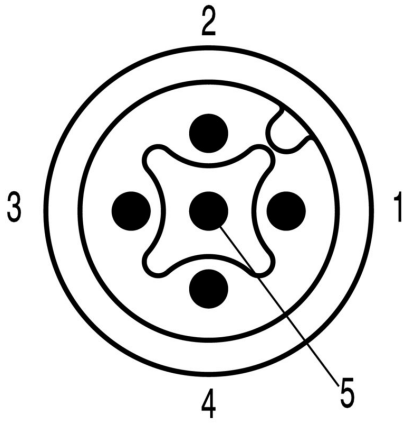

Pin

Pole scheme

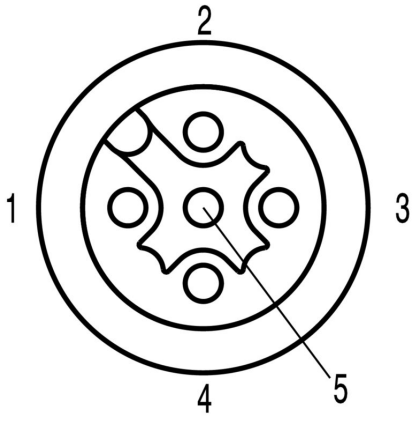

Socket

SAIL-M12WM12W-CD-7.5A

Weidmüller Interface GmbH & Co. KG
Klingenbergstraße 26
D-32758 Detmold
Germany

www.weidmueller.com

Drawings

Wiring diagram

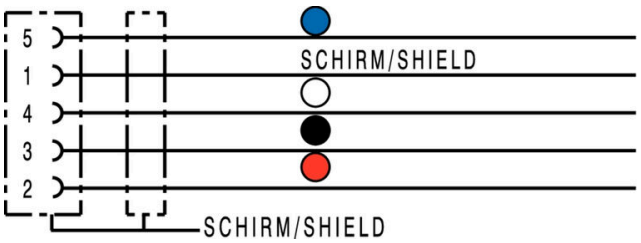

The ideal tool: Screwty ® with torque function



Light, securely screwed-in round plug-in connectors. Screwty set DM / VPE: 1 / Order No.: 1920000000 Adapters: M12, M12 F, M8, M8 F