Data sheet

# SVF 7.62HP/02/180SF SN BK BX

**Weidmüller Interface GmbH & Co. KG**
Klingenbergstraße 26
D-32758 Detmold
Germany

www.weidmueller.com

## Product image

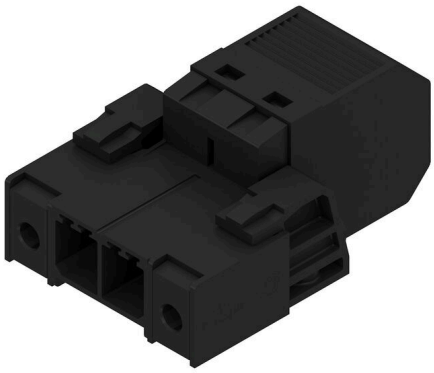

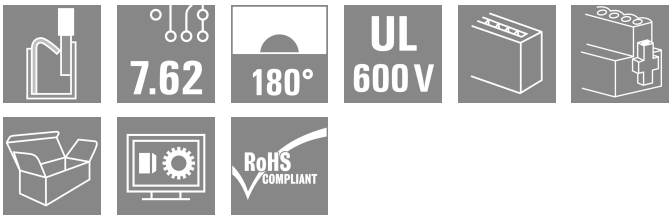


180° inverted pin header with PUSH IN connection technology for field wiring in 6mm² in a 7.62 pitch, as a “three-flange variant” for enclosure feed-through. Suitable for enclosures with a max. wall thickness of 2mm. Also perfect as a touch-safe solution for reverse voltages. Meets the requirements of UL1059 600 V Class C and IEC 61800-5-1.

### General ordering data

| | |
|---|---|
| Version | PCB plug-in connector, male plug, 7.62 mm, Number of poles: 2, 180°, PUSH IN without actuator, Tension-clamp connection, Clamping range, max. : 10 mm², Box |
| Order No. | 1060950000 |
| Type | SVF 7.62HP/02/180SF SN BK BX |
| GTIN (EAN) | 4032248810772 |
| Qty. | 50 items |
| Product data | IEC: 1000 V / 57 A / 0.5 - 10 mm²<br>UL: 600 V / 39 A / AWG 24 - AWG 10 |
| Packaging | Box |

# SVF 7.62HP/02/180SF SN BK BX

**Weidmüller Interface GmbH & Co. KG**
Klingenbergstraße 26
D-32758 Detmold
Germany

www.weidmueller.com

## Technical data

### Approvals

| | |
|---|---|
| Approvals | |
| ROHS | Conform |
| UL File Number Search | UL Website |
| Certificate No. (cURus) | E60693 |

### Dimensions and weights

| | | | |
|---|---|---|---|
| Depth | 44.7 mm | Depth (inches) | 1.7598 inch |
| Height | 20.6 mm | Height (inches) | 0.811 inch |
| Width | 30.48 mm | Width (inches) | 1.2 inch |
| Net weight | 14.54 g | | |

### Environmental Product Compliance

| | |
|---|---|
| RoHS Compliance Status | Compliant without exemption |
| REACH SVHC | No SVHC above 0.1 wt% |

### System Parameters

| | | | |
|---|---|---|---|
| Product family | OMNIMATE Power - series BV/SV 7.62HP | Type of connection | Field connection |
| Wire connection method | PUSH IN without actuator, Tension-clamp connection | Pitch in mm (P) | 7.62 mm |
| Pitch in inches (P) | 0.300 " | Conductor outlet direction | 180° |
| Number of poles | 2 | L1 in mm | 7.62 mm |
| L1 in inches | 0.300 " | Number of rows | 1 |
| Pin series quantity | 1 | Rated cross-section | 6 mm² |
| Touch-safe protection acc. to DIN VDE 57 106 | Safe from finger touch | Touch-safe protection acc. to DIN VDE 0470 | IP20 plugged |
| Protection degree | IP20 | Volume resistance | 4.50 mΩ |
| Can be coded | Yes | Stripping length | 12 mm |
| Tightening torque for screw flange, min. | 0.2 Nm | Tightening torque for screw flange, max. | 0.3 Nm |
| Screwdriver blade | 0.6 x 3.5 | Plugging cycles | 25 |

### Material data

| | | | |
|---|---|---|---|
| Insulating material | PA GF | Colour | black |
| Colour chart (similar) | RAL 9011 | Insulating material group | II |
| Comparative Tracking Index (CTI) | ≥ 500 | Moisture Level (MSL) | |
| UL 94 flammability rating | V-0 | Contact material | Cu-alloy |
| Contact surface | tinned | Layer structure of plug contact | 4...6 µm Sn glossy |
| Storage temperature, min. | -40 °C | Storage temperature, max. | 70 °C |
| Operating temperature, min. | -50 °C | Operating temperature, max. | 125 °C |
| Temperature range, installation, min. | -25 °C | Temperature range, installation, max. | 125 °C |

### Conductors suitable for connection

| | |
|---|---|
| Clamping range, min. | 0.5 mm² |
| Clamping range, max. | 10 mm² |
| Solid, min. H05(07) V-U | 0.5 mm² |
| Solid, max. H05(07) V-U | 6 mm² |
| Stranded, min. H07V-R | 10 mm² |

## SVF 7.62HP/02/180SF SN BK BX

**Weidmüller Interface GmbH & Co. KG**
Klingenbergstraße 26
D-32758 Detmold
Germany

www.weidmueller.com

# Technical data

| | |
|---|---|
| Stranded, max. H07V-R | 10 mm² |
| Flexible, min. H05(07) V-K | 0.5 mm² |
| Flexible, max. H05(07) V-K | 10 mm² |
| w. plastic collar ferrule, DIN 46228 pt 4, min. | 1.5 mm² |
| w. plastic collar ferrule, DIN 46228 pt 4, max. | 6 mm² |
| w. wire end ferrule, DIN 46228 pt 1, min. | 1.5 mm² |
| w. wire end ferrule, DIN 46228 pt 1, max. | 6 mm² |

| | | | | |
|---|---|---|---|---|
| Clampable conductor | Cross-section for conductor connection | Type | fine-wired | |
| | | nominal | 2.5 mm² | |
| | wire end ferrule | Stripping length | nominal | 12 mm |
| | | Recommended wire-end ferrule | H2,5/12 | |
| | | Stripping length | nominal | 14 mm |
| | | Recommended wire-end ferrule | H2,5/19D BL | |
| | Cross-section for conductor connection | Type | fine-wired | |
| | | nominal | 4 mm² | |
| | wire end ferrule | Stripping length | nominal | 12 mm |
| | | Recommended wire-end ferrule | H4,0/12 | |
| | | Stripping length | nominal | 14 mm |
| | | Recommended wire-end ferrule | H4,0/20D GR | |
| | Cross-section for conductor connection | Type | fine-wired | |
| | | nominal | 6 mm² | |
| | wire end ferrule | Stripping length | nominal | 12 mm |
| | | Recommended wire-end ferrule | H6,0/12 | |
| | | Stripping length | nominal | 14 mm |
| | | Recommended wire-end ferrule | H6,0/20 SW | |
| | Cross-section for conductor connection | Type | fine-wired | |
| | | nominal | 1.5 mm² | |
| | wire end ferrule | Stripping length | nominal | 15 mm |
| | | Recommended wire-end ferrule | H1,5/18D SW | |
| | | Stripping length | nominal | 12 mm |
| | | Recommended wire-end ferrule | H1,5/12 | |
| Reference text | The outside diameter of the plastic collar should not be larger than the pitch (P), Length of ferrules is to be chosen depending on the product and the rated voltage. | | | |

### Rated data acc. to IEC

| | | | |
|---|---|---|---|
| tested acc. to standard | IEC 60664-1, IEC 61984 | Rated current, min. number of poles (Tu=20°C) | 57 A |
| Rated current, max. number of poles (Tu=20°C) | 50 A | Rated current, min. number of poles (Tu=40°C) | 57 A |
| Rated current, max. number of poles (Tu=40°C) | 45 A | Rated voltage for surge voltage class / pollution degree II/2 | 1000 V |
| Rated voltage for surge voltage class / pollution degree III/2 | 800 V | Rated voltage for surge voltage class / pollution degree III/3 | 800 V |
| Rated impulse voltage for surge voltage class/ pollution degree II/2 | 6 kV | Rated impulse voltage for surge voltage class/ pollution degree III/2 | 8 kV |
| Rated impulse voltage for surge voltage class/ contamination degree III/3 | 8 kV | Short-time withstand current resistance | 3 x 1s with 420 A |
| Creepage distance, min. | 12.7 mm | Clearance, min. | 12.7 mm |

# SVF 7.62HP/02/180SF SN BK BX

**Weidmüller Interface GmbH & Co. KG**
Klingenbergstraße 26
D-32758 Detmold
Germany

www.weidmueller.com

## Technical data

### Rated data acc. to CSA

| | | | |
|---|---|---|---|
| Institute (CSA) | CSA | Certificate No. (CSA) | 200039-1121690 |
| Rated voltage (Use group B / CSA) | 600 V | Rated voltage (Use group C / CSA) | 600 V |
| Rated voltage (Use group D / CSA) | 600 V | Rated current (Use group B / CSA) | 36 A |
| Rated current (Use group C / CSA) | 36 A | Rated current (Use group D / CSA) | 5 A |
| Wire cross-section, AWG, min. | AWG 24 | Wire cross-section, AWG, max. | AWG 10 |
| Reference to approval values | Specifications are maximum values, details - see approval certificate. | | |

### Rated data acc. to UL 1059

| | | | |
|---|---|---|---|
| Institute (cURus) | CURUS | Certificate No. (cURus) | E60693 |
| Rated voltage (Use group B / UL 1059) | 600 V | Rated voltage (Use group C / UL 1059) | 600 V |
| Rated voltage (Use group D / UL 1059) | 600 V | Rated current (Use group B / UL 1059) | 39 A |
| Rated current (Use group C / UL 1059) | 39 A | Rated current (Use group D / UL 1059) | 5 A |
| Wire cross-section, AWG, min. | AWG 24 | Wire cross-section, AWG, max. | AWG 10 |
| Reference to approval values | Specifications are maximum values, details - see approval certificate. | | |

### Packing

| | | | |
|---|---|---|---|
| Packaging | Box | VPE length | 353.00 mm |
| VPE width | 138.00 mm | VPE height | 62.00 mm |

### Type tests

| | | | |
|---|---|---|---|
| Test: Durability of markings | Standard | DIN EN 61984 section 7.3.2 / 09.02 taking pattern from DIN EN 60068-2-70 / 07.96 | |
| | Test | mark of origin, type identification, pitch | |
| | Evaluation | available | |
| | Test | durability | |
| | Evaluation | passed | |
| Test: Misengagement (Non-interchangeability) | Standard | DIN EN 61984 section 6.3 and 6.9.1 / 09.02, DIN EN 60512-13-5 / 11.08 | |
| | Test | 180° turned with coding elements | |
| | Evaluation | passed | |
| | Test | 180° turned without coding elements | |
| | Evaluation | passed | |
| Test: Clampable cross section | Standard | DIN EN 60999-1 section 7 and 9.1 / 12.00, DIN EN 60947-1 section 8.2.4.5.1 / 04.08 | |
| | Conductor type | Type of conductor and conductor cross-section | solid 0.5 mm² |
| | | Type of conductor and conductor cross-section | stranded 0.5 mm² |
| | | Type of conductor and conductor cross-section | solid 6 mm² |
| | | Type of conductor and conductor cross-section | stranded 6 mm² |
| | | Type of conductor and conductor cross-section | AWG 24/1 |
| | | Type of conductor and conductor cross-section | AWG 24/19 |

Weidmüller Interface GmbH & Co. KG
Klingenbergstraße 26
D-32758 Detmold
Germany

www.weidmueller.com

## Technical data

| | | | |
|---|---|---|---|
| | | Type of conductor and conductor cross-section | AWG 14/1 |
| | | Type of conductor and conductor cross-section | AWG 14/19 |
| | Evaluation | passed | |
| Test for damage to and accidental loosening of conductors | Standard | DIN EN 60999-1 section 9.4 / 12.00 | |
| | Requirement | 0.3 kg | |
| | Conductor type | Type of conductor and conductor cross-section | H05V-U0.5 |
| | | Type of conductor and conductor cross-section | H05V-K0.5 |
| | | Type of conductor and conductor cross-section | AWG 20/1 |
| | | Type of conductor and conductor cross-section | AWG 20/19 |
| | Evaluation | passed | |
| | Requirement | 1.4 kg | |
| | Conductor type | Type of conductor and conductor cross-section | H07V-U6 |
| | | Type of conductor and conductor cross-section | H07V-K6 |
| | | Type of conductor and conductor cross-section | AWG 10/1 |
| | | Type of conductor and conductor cross-section | AWG 10/19 |
| | Evaluation | passed | |
| Pull-out test | Standard | DIN EN 60999-1 section 9.5 / 12.00 | |
| | Requirement | ≥20 N | |
| | Conductor type | Type of conductor and conductor cross-section | H05V-U0.5 |
| | | Type of conductor and conductor cross-section | H05V-K0.5 |
| | | Type of conductor and conductor cross-section | AWG 20/1 |
| | | Type of conductor and conductor cross-section | AWG 20/19 |
| | Evaluation | passed | |
| | Requirement | ≥80 N | |
| | Conductor type | Type of conductor and conductor cross-section | H07V-U6 |
| | | Type of conductor and conductor cross-section | H07V-K6 |
| | | Type of conductor and conductor cross-section | AWG 10/1 |
| | | Type of conductor and conductor cross-section | AWG 10/19 |

# SVF 7.62HP/02/180SF SN BK BX

**Weidmüller Interface GmbH & Co. KG**
Klingenbergstraße 26
D-32758 Detmold
Germany

www.weidmueller.com

## Technical data

| | | |
|---|---|---|
| | Evaluation | passed |

### Important note

| | |
|---|---|
| IPC conformity | Conformity: The products are developed, manufactured and delivered according international recognized standards and norms and comply with the assured properties in the data sheet resp. fulfill decorative properties in accordance with IPC-A-610 "Class 2". Further claims on the products can be evaluated on request. |
| Notes | • Additional variants on request<br>• Rated current related to rated cross-section & min. No. of poles.<br>• Wire end ferrule without plastic collar to DIN 46228/1<br>• Wire end ferrule with plastic collar to DIN 46228/4<br>• P on drawing = pitch<br>• Rated data refer only to the component itself. Clearance and creepage distances to other components are to be designed in accordance with the relevant application standards.<br>• In accordance with IEC 61984, OMNIMATE-connectors are connectors without breaking capacity (COC). During designated use, connectors are not allowed to be engaged or disengaged when live or under load<br>• Long term storage of the product with average temperature of 50 °C and maximum humidity 70%, 36 months |

### Classifications

| | | | |
|---|---|---|---|
| ETIM 8.0 | EC002638 | ETIM 9.0 | EC002638 |
| ETIM 10.0 | EC002638 | ECLASS 14.0 | 27-46-02-02 |
| ECLASS 15.0 | 27-46-02-02 | | |

# SVF 7.62HP/02/180SF SN BK BX

**Weidmüller Interface GmbH & Co. KG**
Klingenbergstraße 26
D-32758 Detmold
Germany

www.weidmueller.com

## Drawings

### Product image

### Dimensional drawing

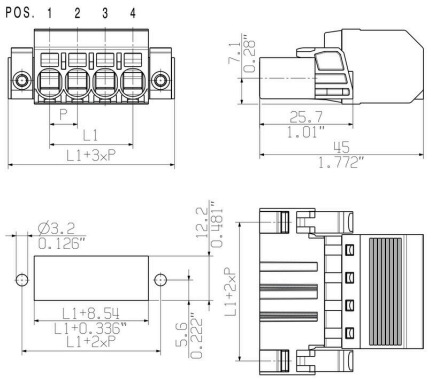


### Graph

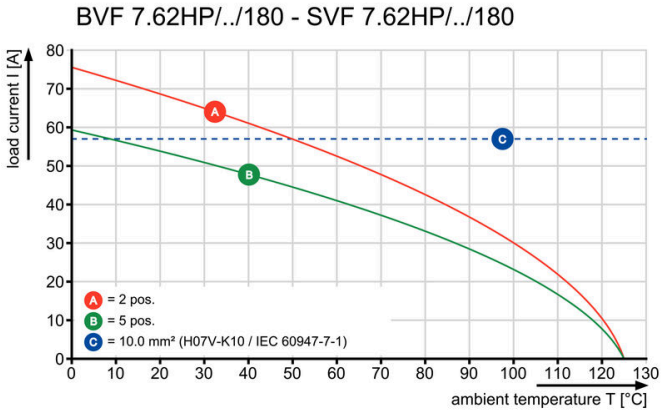


### Graph

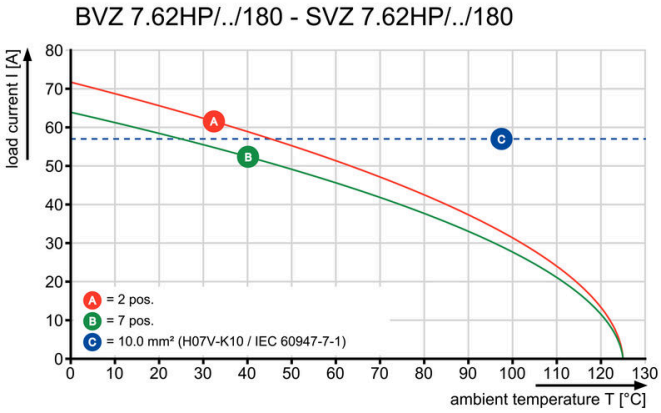

# SVF 7.62HP/02/180SF SN BK BX

**Weidmüller Interface GmbH & Co. KG**
Klingenbergstraße 26
D-32758 Detmold
Germany

www.weidmueller.com

## Accessories

### Coding elements

The pluggable connections for power electronics - optimised for modern drive technologies, e.g. motor starters, frequency converters and servo-controllers. OMNIMATE Power sets the new standard – with increased safety and innovative solutions such as the pluggable shield, integrated signal contacts and one-handed operation.
The three product lines offer you further advantages:
- Application-oriented scalability: from the compact 4 mm² connector for 29 A (IEC) or 20 A (UL) up to the sturdy 16 mm² connector for 76 A (IEC) or 54 A (UL)
- Unlimited usage up to 1,000 V (IEC) or 600 V (UL)
- A variety of application optimised mounting options

Our service:
Design your individual connectors simply by using the product configurator.

#### General ordering data

| | | |
|---|---|---|
| Type | BV/SV 7.62HP KO | Version |
| Order No. | 1937590000 | PCB plug-in connector, Accessories, Coding element, black, Number |
| GTIN (EAN) | 4032248608881 | of poles: 1 |
| Qty. | 50 ST | |

### Slotted screwdriver

Slotted screwdriver with rounded blade SD DIN 5265, ISO 2380/2, output to DIN 5264, ISO 2380/1. ChromTop tip, SoftFinish grip

#### General ordering data

| | | |
|---|---|---|
| Type | SDS 0.8X4.5X125 | Version |
| Order No. | 9009020000 | Screwdriver, Screwdriver |
| GTIN (EAN) | 4032248266883 | |
| Qty. | 1 ST | |

### Crimping tools

Crimping tools for wire end ferrules, with and without plastic collars
- Ratchet guarantees precise crimping
- Release option in the event of incorrect operation

# SVF 7.62HP/02/180SF SN BK BX

**Weidmüller Interface GmbH & Co. KG**
Klingenbergstraße 26
D-32758 Detmold
Germany

www.weidmueller.com

## Accessories

### General ordering data

| | | |
|---|---|---|
| Type | PZ 6/5 | Version |
| Order No. | 9011460000 | Pressing tool, Crimping tool for wire-end ferrules, 0.25mm², 6mm², |
| GTIN (EAN) | 4008190165352 | Trapezoidal indentation crimp |
| Qty. | 1 ST | |