Data sheet

SAIL-M12GM12W-4S0.3U

Weidmüller Interface GmbH & Co. KG
Klingenbergstraße 26
D-32758 Detmold
Germany

www.weidmueller.com

Sensor/actuator cables are used for wiring sensors and actuators and for transmitting data or power in various applications. The moulded cable offers connected and tested connection of the plug-in connector to the cable ex-works. The cables may be exposed to a wide range of conditions, such as humidity, dust, heat, cold, shock or vibration.
Our developers have focused specifically on this issue and designed a host of different M8 and M12 sensor-actuator cables so you are bound to find the solution you need for your application.
Our sensor cables come with 360° shielding which provides protection against electromagnetic interference.
Is there something you have not managed to find or you feel needs explanation? Talk to us!

General ordering data

Version	Sensor/actuator line, Connecting line, M12 / M12, Number of poles : 4, 0.3 m, pin, straight - socket, 90°, Shielded: Yes, LED: No, Sheath material: PUR, Halogen: No
Order No.	1059480030
Type	SAIL-M12GM12W-4S0.3U
GTIN (EAN)	4099987891059
Qty.	1 items

SAIL-M12GM12W-4S0.3U

Weidmüller Interface GmbH & Co. KG
Klingenbergstraße 26
D-32758 Detmold
Germany

www.weidmueller.com

Technical data

Dimensions and weights

Net weight	40 g

Technical specifications for cable

Cable length	0.3 m	Sheathing colour	black
Resistance to oils	in accordance with IEC 60811:404	Suitable for cable carriers	Yes
Core cross-section	0.34 mm²	Shielded	Yes
Halogen	No	Insulation	PP
Acceleration	5 m/s²	Bending radius, min., moving	10 x cable diameter
Bending radius, min., stationary	5 x cable diameter	Bending cycles	2 Mio
Resistance to spread of flame	In accordance with UL1581 UL / CUL FT2, in accordance with IEC 60332-2-2	Speed	200 m/s
Sheath material	PUR	Configurable cable length	No
LABS-free	Yes	Hydrolysis and microbe resistant	Yes
Outer cladding in accordance with UL AWM style	20549 (80 °C / 300 V)	Core in accordance with UL AWM style	10493 (80 °C / 300 V)
Hybrid cable	No	Irradiation crosslinked	No
Welding spark resistance	No	Colour coding	brown, white, blue, black
Torsion resistance	0 °/m	Temperature range, stationary	-50...80 °C
Resistant to welding beads	No	Temperature range, moving	-25...80 °C
Number of poles	4	Outside diameter	5.4 mm ± 0.2 mm

General technical data

Coding	A-coded	Connection thread	M12 / M12
Contact surface	Gold-plated	LED	No
Version	pin, straight - socket, 90°	Housing main material	PUR
Insulation resistance	108 Ω	Contact material	CuZn35PB2
Nominal voltage	250 V	Nominal current	4 A
Protection degree	IP65, IP66, IP67, IP68, when screwed in	Plugging cycles	≥ 100
Pollution severity	3	jumpered	No
Threaded ring material	Brass, nickel-plated	Temperature range of housing	-25...+85 °C

Electrical properties

Insulation resistance	108 Ω	Nominal voltage	250 V

General standards

Connector standard	IEC 61076-2-101

Standards

Connector standard	IEC 61076-2-101

Plug, left

Plug left	connector, M12, A-coded, Number of poles: 4, male contact, straight, shielded

SAIL-M12GM12W-4S0.3U

Weidmüller Interface GmbH & Co. KG
Klingenbergstraße 26
D-32758 Detmold
Germany

www.weidmueller.com

Technical data

Plug, right

Plug right	connector, M12, A-coded, Number of poles: 4, female contact, angled 0°, shielded

Classifications

ETIM 8.0	EC001855	ETIM 9.0	EC001855
ETIM 10.0	EC001855	ECLASS 14.0	27-06-03-11
ECLASS 15.0	27-06-03-11		

SAIL-M12GM12W-4S0.3U

Weidmüller Interface GmbH & Co. KG
Klingenbergstraße 26
D-32758 Detmold
Germany

www.weidmueller.com

Drawings

Dimensioned drawing

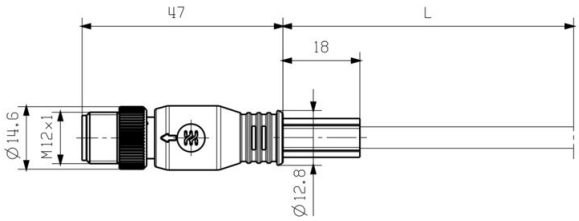

Dimensioned drawing

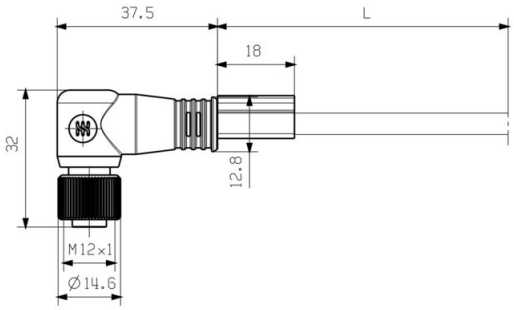

Angled socket

Pole scheme

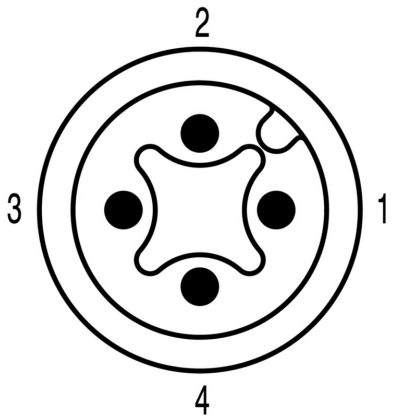

Male

Pole scheme

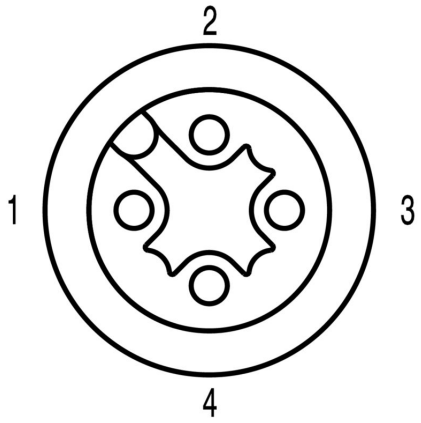

Socket

SAIL-M12GM12W-4S0.3U

Weidmüller Interface GmbH & Co. KG
Klingenbergstraße 26
D-32758 Detmold
Germany

www.weidmueller.com

Drawings

Wiring diagram

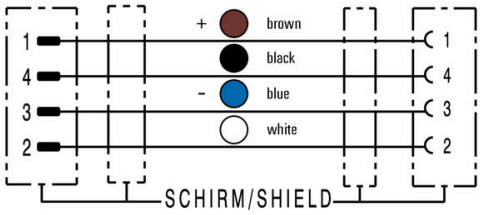

The ideal tool: Screwty ® with torque function

Light, securely screwed-in round plug-in connectors. Screwty set DM / VPE: 1 / Order No.: 1920000000 Adapters: M12, M12 F, M8, M8 F

Weidmüller Interface GmbH & Co. KG
Klingenbergstraße 26
D-32758 Detmold
Germany

www.weidmueller.com

Accessories

Cutting tools

Cutting tools for conductors up to 8 mm, 12 mm, 14 mm and 22 mm outside diameter. The special blade geometry allows pinch-free cutting of copper and aluminium conductors with minimum physical effort. The cutting tools (KT 8 to KT 22) also come with VDE and GS-tested protective insulation up to 1,000 V in accordance with EN/IEC 60900.

General ordering data

Type	KT 8	Version
Order No.	9002650000	Cutting tools, Cutting tool for one-hand operation
GTIN (EAN)	4008190020163	
Qty.	1 ST	

Tools

Sheathing stripper for PVC cables

General ordering data

Type	AM 12	Version
Order No.	9030060000	Tools, Sheathing strippers
GTIN (EAN)	4008190337827	
Qty.	1 ST	

Screwty® cable gland tool with torque function

The ideal tool for any application
Screwty® is the ideal, all-purpose tool for tightening all common sensor and actuator cables. Even difficult-to-reach round plugs are accessible using the Screwty®. A simple turning movement tightens and loosens the connectors without the need for excessive force. The Screwty® is a unique and global solution since it fits with most cables and plugs from other vendors (over 90 %). The Screwty® consists of a handle with a conventional 1/4" adapter. Thus it can be used for all sizes: for M12 and M8 round plug-in connectors, and for M12F and M8F customisable plugs and sockets, as well as for all M23 plugs and sockets.

SAIL-M12GM12W-4S0.3U

Weidmüller Interface GmbH & Co. KG
Klingenbergstraße 26
D-32758 Detmold
Germany

www.weidmueller.com

Accessories

General ordering data

Type	SCREWTY-M12-DM	Version
Order No.	1900001000	Cable gland tool for moulded M12 lines
GTIN (EAN)	4032248436408	
Qty.	1 ST	
Type	SAI-SCREWTY BOX	Version
Order No.	1939180000	Bolting tool
GTIN (EAN)	4032248615506	
Qty.	1 ST	

Tools

- Stripping tools with automatic self-adjustment
- For flexible and solid conductors
- Ideally suitable for mechanical and plant engineering, railway and rail traffic, wind energy, robot technology, explosion protection as well as marine, offshore and ship building sectors
- Stripping length adjustable via end stop
- Automatic opening of clamping jaws after stripping
- No fanning-out of individual conductors
- Adjustable to diverse insulation thicknesses
- Double-insulated cables in two process steps without special adjustment
- No play in self-adjusting cutting unit
- Long service life
- Optimised ergonomic design

General ordering data

Type	STRIPPER 6-16 RED-LINE	Version
Order No.	9203110000	Stripping and cutting tool
GTIN (EAN)	4032248541423	
Qty.	1 ST	

SAIL-M12GM12W-4S0.3U

Weidmüller Interface GmbH & Co. KG
Klingenbergstraße 26
D-32758 Detmold
Germany

www.weidmueller.com

Accessories

Blank

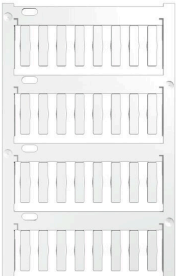

TM-I is an acknowledged and accredited marker type for traffic engineering applications. There are various different tag lengths available for individual labelling with long character strings. Easy handling of separation and installation thanks to the project marker field. Pre-attachment of sleeves and retrofitting of tags offer excellent versatility
The special contour of TM-I allows easy assembly and secures firm positioning. They are compatible with a number of commercially available sleeves. Thanks to the MultiCard format, the tags can be printed quickly and conveniently with the PrintJet CONNECT, plotter or the STI pen.

- Easy handling of separation and installation thanks to the project marker field.
- Acknowledged and accredited marker for traffic engineering applications
- Pre-attachment of sleeves and retrofitting of tags offer excellent versatility
- Not suited for labelling with P-Ink or STI pen in connection with CLI T sleeves

For custom printing: Please send us a file of our labeling software M-Print PRO or M-Print PRO Online (without installation) for your labeling specifications.

General ordering data

Type	TM-I 18 MC NE WS	Version
Order No.	1718431044	TM-I, Insert markers, 1.5 - 22 mm, 18 x 4 mm, white
GTIN (EAN)	4008190349011	
Qty.	320 ST	
Type	TM-I 18 MC NE GE	Version
Order No.	1718431687	TM-I, Insert markers, 1.5 - 22 mm, 18 x 4 mm, yellow
GTIN (EAN)	4008190349028	
Qty.	320 ST	