Data sheet

SL 7.62HP/05/180G 3.2SN OR BX

Weidmüller Interface GmbH & Co. KG
Klingenbergstraße 26
D-32758 Detmold
Germany

www.weidmueller.com

Product image

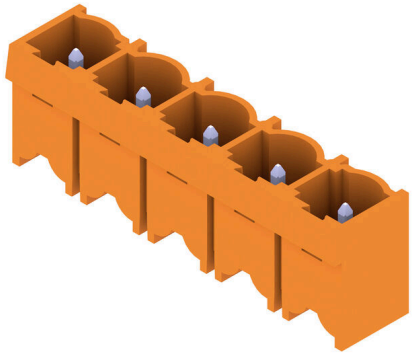

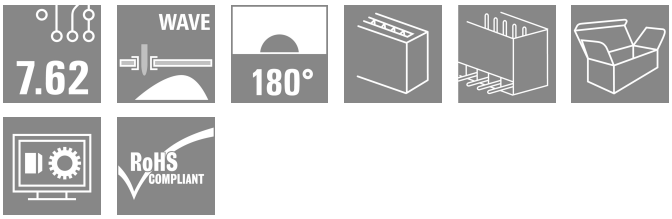

Power on board - 100% safety, 100% integration, 100% cost-effectiveness:
The compact, efficient solution for UL-600V applications in the lower performance range.
High-performance male header for applications up to 12 kVA:
- 29 A at 400 V (IEC)
- 20 A at 600 V (UL)
- Single compartment mating profile

Assisting in device approval:
- Meets the requirements for 600 V according to UL 508 / UL840.
- Meets the increased requirements on touch safety as per IEC68100-5-1 when combined with female header BLZ 7.62 HP

The slimming diet for multiple-stage device series:
Reduce the size and cut costs in the high-volume lower performance range without compromising device approval!
Male header, 180° outlet direction, without flange

General ordering data

Version	PCB plug-in connector, male header, closed side, THT solder connection, 7.62 mm, Number of poles: 5, 180°, Solder pin length (l): 3.2 mm, tinned, orange, Box
Order No.	1048900000
Type	SL 7.62HP/05/180G 3.2SN OR BX
GTIN (EAN)	4032248786879
Qty.	50 items
Product data	IEC: 630 V / 29 A UL: 300 V / 20 A
Packaging	Box

SL 7.62HP/05/180G 3.2SN OR BX

Weidmüller Interface GmbH & Co. KG
Klingenbergstraße 26
D-32758 Detmold
Germany

www.weidmueller.com

Technical data

Approvals

Approvals	c UL us
ROHS	Conform
UL File Number Search	UL Website
Certificate No. (cURus)	E60693

Dimensions and weights

Depth	8.4 mm	Depth (inches)	0.3307 inch
Height	15 mm	Height (inches)	0.5906 inch
Height of lowest version	11.8 mm	Width	37.28 mm
Width (inches)	1.4677 inch	Net weight	2.72 g

Temperatures

Continuous operating temp., min.	-25 °C	Continuous operating temp., max.	100 °C

Environmental Product Compliance

RoHS Compliance Status	Compliant without exemption	
REACH SVHC	No SVHC above 0.1 wt%	
Product Carbon Footprint	Cradle to gate	0,022 kg CO2 eq.

System specifications

Product family	OMNIMATE Power - series BL/SL 7.62HP	Type of connection	Board connection
Mounting onto the PCB	THT solder connection	Pitch in mm (P)	7.62 mm
Pitch in inches (P)	0.300 "	Outgoing elbow	180°
Number of poles	5	Number of solder pins per pole	1
Solder pin length (l)	3.2 mm	Solder pin dimensions	1.0 x 1.0 mm
Solder pin dimensions = d tolerance	+0,01 / -0,03 mm	Solder eyelet hole diameter (D)	1.4 mm
Solder eyelet hole diameter tolerance (D)	+ 0,1 mm	L1 in mm	30.48 mm
L1 in inches	1.200 "	Number of rows	1
Pin series quantity	1	Touch-safe protection acc. to DIN VDE 57 106	Safe from finger touch, plugged
Touch-safe protection acc. to DIN VDE 0470	IP20 plugged	Protection degree	IP10
Can be coded	Yes	Plugging cycles	25

Material data

Insulating material	PBT	Colour	orange
Colour chart (similar)	RAL 2000	Insulating material group	IIIa
Comparative Tracking Index (CTI)	≥ 200	Moisture Level (MSL)	
UL 94 flammability rating	V-0	Contact material	Cu-alloy
Contact surface	tinned	Layer structure of solder connection	1...3 µm Ni / 2...4 µm Sn matt
Layer structure of plug contact	1...3 µm Ni / 2...4 µm Sn matt	Storage temperature, min.	-40 °C
Storage temperature, max.	70 °C	Operating temperature, min.	-50 °C
Operating temperature, max.	100 °C	Temperature range, installation, min.	-25 °C
Temperature range, installation, max.	100 °C		

SL 7.62HP/05/180G 3.2SN OR BX

Weidmüller Interface GmbH & Co. KG
Klingenbergstraße 26
D-32758 Detmold
Germany

www.weidmueller.com

Technical data

Rated data acc. to IEC

tested acc. to standard	IEC 60664-1, IEC 61984	Rated current, min. number of poles (Tu=20°C)	29 A
Rated current, max. number of poles (Tu=20°C)	26 A	Rated current, min. number of poles (Tu=40°C)	25 A
Rated current, max. number of poles (Tu=40°C)	21 A	Rated voltage for surge voltage class / pollution degree II/2	630 V
Rated voltage for surge voltage class / pollution degree III/2	500 V	Rated voltage for surge voltage class / pollution degree III/3	400 V
Rated impulse voltage for surge voltage class/ pollution degree II/2	6 kV	Rated impulse voltage for surge voltage class/ pollution degree III/2	6 kV
Rated impulse voltage for surge voltage class/ contamination degree III/3	6 kV	Short-time withstand current resistance	3 x 1s with 180 A
Creepage distance, min.	8.1 mm	Clearance, min.	6.5 mm

Rated data acc. to CSA

Rated voltage (Use group B / CSA)	300 V	Rated voltage (Use group C / CSA)	300 V
Rated voltage (Use group D / CSA)	600 V	Rated current (Use group B / CSA)	20 A
Rated current (Use group C / CSA)	20 A	Rated current (Use group D / CSA)	5 A

Rated data acc. to UL 1059

Institute (cURus)	CURUS	Certificate No. (cURus)	E60693
Rated voltage (Use group B / UL 1059)	300 V	Rated voltage (Use group C / UL 1059)	300 V
Rated voltage (Use group D / UL 1059)	600 V	Rated current (Use group B / UL 1059)	20 A
Rated current (Use group C / UL 1059)	20 A	Rated current (Use group D / UL 1059)	5 A
Creepage distance, min.	11.2 mm	Clearance distance, min.	6.5 mm
Reference to approval values	Specifications are maximum values, details - see approval certificate.		

Packing

Packaging	Box	VPE length	168.00 mm
VPE width	116.00 mm	VPE height	38.00 mm

Important note

IPC conformity	Conformity: The products are developed, manufactured and delivered according international recognized standards and norms and comply with the assured properties in the data sheet resp. fulfill decorative properties in accordance with IPC-A-610 "Class 2". Further claims on the products can be evaluated on request.
Notes	• Additional variants on request • Gold-plated contact surfaces on request • Rated current related to rated cross-section & min. No. of poles. • P on drawing = pitch • Rated data refer only to the component itself. Clearance and creepage distances to other components are to be designed in accordance with the relevant application standards. • In accordance with IEC 61984, OMNIMATE-connectors are connectors without breaking capacity (COC). During designated use, connectors are not allowed to be engaged or disengaged when live or under load • Long term storage of the product with average temperature of 50 °C and maximum humidity 70%, 36 months

Classifications

ETIM 8.0	EC002637	ETIM 9.0	EC002637
ETIM 10.0	EC002637	ECLASS 14.0	27-46-02-01
ECLASS 15.0	27-46-02-01		

SL 7.62HP/05/180G 3.2SN OR BX

Weidmüller Interface GmbH & Co. KG
Klingenbergstraße 26
D-32758 Detmold
Germany

www.weidmueller.com

Drawings

Product image

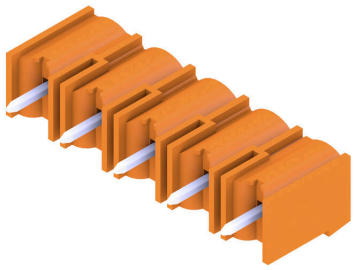

Dimensional drawing

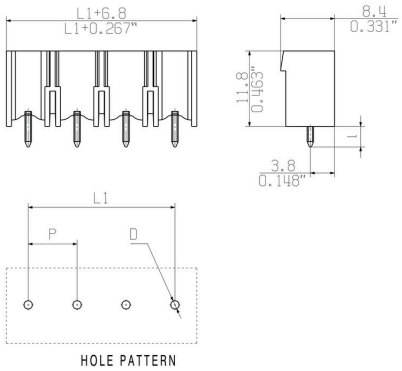

SL 7.62HP/05/180G 3.2SN OR BX

Weidmüller Interface GmbH & Co. KG
Klingenbergstraße 26
D-32758 Detmold
Germany

www.weidmueller.com

Accessories

Coding elements

Only connects what is supposed to be connected: the right connection at the right place.
Coding elements and locking devices clearly assign connecting elements during the manufacturing process and operation
The coding elements and locking devices are inserted prior to assembly or during the cable assembly phase.
The Weidmüller alternative: configure online using the variant configurator to precode prior to delivery.
Incorrect assembly on the circuit board and incorrect plugging of connecting elements is no longer possible.
The advantage: no troubleshooting during manufacture and no operational errors by the user.

General ordering data

Type	BLZ/SL KO OR BX	Version
Order No.	1573010000	PCB plug-in connector, Accessories, Coding element, orange, Number
GTIN (EAN)	4008190048396	of poles: 1
Qty.	100 ST	
Type	BLZ/SL KO BK BX	Version
Order No.	1545710000	PCB plug-in connector, Accessories, Coding element, black, Number
GTIN (EAN)	4008190087142	of poles: 1
Qty.	50 ST	