Data sheet

SV 7.62HP/05/90MF3 3.5SN BK BX

Weidmüller Interface GmbH & Co. KG
Klingenbergstraße 26
D-32758 Detmold
Germany

www.weidmueller.com

Product image

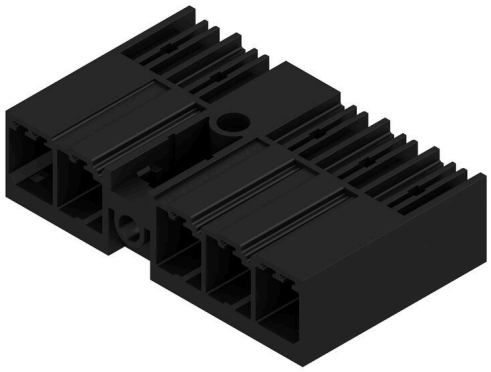

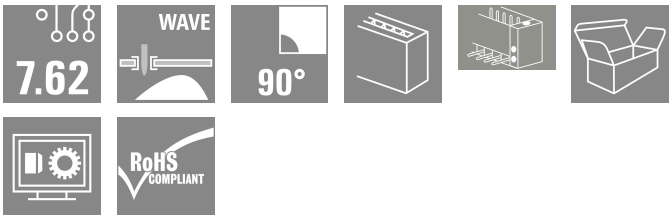

90° male header with middle flange with a 7.62 pitch.
Meets the requirements of IEC 61800-5-1 and enables UL approval as per UL840 600 V.
Without a female header, the mating profile guarantees minimum touch safety of >3 mm with 20 N pressure on the test finger.
The automatically locking middle flange which can optionally also be screwed, reduces space requirements by one pitch width in comparison with conventional solutions.
On request: available with screw flange or without flange.

General ordering data

Version	PCB plug-in connector, male header, closed side, Middle flange, THT solder connection, 7.62 mm, Number of poles: 5, 90°, Solder pin length (l): 3.5 mm, tinned, black, Box
Order No.	1048680000
Type	SV 7.62HP/05/90MF3 3.5SN BK BX
GTIN (EAN)	4032248786350
Qty.	36 items
Product data	IEC: 1000 V / 57 A UL: 300 V / 40.5 A
Packaging	Box

SV 7.62HP/05/90MF3 3.5SN BK BX

Weidmüller Interface GmbH & Co. KG
Klingenbergstraße 26
D-32758 Detmold
Germany

www.weidmueller.com

Technical data

Approvals

Approvals	
ROHS	Conform
UL File Number Search	UL Website
Certificate No. (cURus)	E60693

Dimensions and weights

Depth	28.3 mm	Depth (inches)	1.1142 inch
Height	14.9 mm	Height (inches)	0.5866 inch
Height of lowest version	11.4 mm	Width	45.72 mm
Width (inches)	1.8 inch	Net weight	10.12 g

Environmental Product Compliance

RoHS Compliance Status	Compliant without exemption
REACH SVHC	No SVHC above 0.1 wt%

System specifications

Product family	OMNIMATE Power - series BV/SV 7.62HP	Type of connection	Board connection
Mounting onto the PCB	THT solder connection	Pitch in mm (P)	7.62 mm
Pitch in inches (P)	0.300 "	Outgoing elbow	90°
Number of poles	5	Number of solder pins per pole	2
Solder pin length (l)	3.5 mm	Solder pin length tolerance	+0.1 / -0.3 mm
Solder pin dimensions	0.8 x 1.0 mm	Solder eyelet hole diameter (D)	1.3 mm
Solder eyelet hole diameter tolerance (D)	+ 0,1 mm	L1 in mm	38.10 mm
L1 in inches	1.500 "	Number of rows	1
Pin series quantity	1	Touch-safe protection acc. to DIN VDE 57 106	Touch-safe above the printed circuit board
Touch-safe protection acc. to DIN VDE 0470	IP 20	Protection degree	IP20, when fully mounted
Volume resistance	2.00 mΩ	Can be coded	Yes
Plugging cycles	25		

Material data

Insulating material	PA GF	Colour	black
Colour chart (similar)	RAL 9011	Insulating material group	II
Comparative Tracking Index (CTI)	≥ 500	Moisture Level (MSL)	
UL 94 flammability rating	V-0	Contact material	Copper alloy
Contact surface	tinned	Layer structure of solder connection	1...3 µm Ni / 4...6 µm Sn matt
Storage temperature, min.	-40 °C	Storage temperature, max.	70 °C
Operating temperature, min.	-50 °C	Operating temperature, max.	130 °C
Temperature range, installation, min.	-25 °C	Temperature range, installation, max.	130 °C

Rated data acc. to IEC

tested acc. to standard	IEC 60664-1, IEC 61984	Rated current, min. number of poles (Tu=20°C)	57 A
Rated current, max. number of poles (Tu=20°C)	41 A	Rated current, min. number of poles (Tu=40°C)	41 A

SV 7.62HP/05/90MF3 3.5SN BK BX

Weidmüller Interface GmbH & Co. KG
Klingenbergstraße 26
D-32758 Detmold
Germany

www.weidmueller.com

Technical data

Rated current, max. number of poles (Tu=40°C)	41 A	Rated voltage for surge voltage class / pollution degree II/2	1000 V
Rated voltage for surge voltage class / pollution degree III/2	630 V	Rated voltage for surge voltage class / pollution degree III/3	630 V
Rated impulse voltage for surge voltage class/ pollution degree II/2	6 kV	Rated impulse voltage for surge voltage class/ pollution degree III/2	6 kV
Rated impulse voltage for surge voltage class/ contamination degree III/3	6 kV	Short-time withstand current resistance	3 x 1s with 420 A
Creepage distance, min.	9.6 mm	Clearance, min.	6.9 mm

Rated data acc. to CSA

Institute (CSA)	CSA	Certificate No. (CSA)	200039-1121690
Rated voltage (Use group B / CSA)	300 V	Rated voltage (Use group C / CSA)	300 V
Rated voltage (Use group D / CSA)	600 V	Rated current (Use group B / CSA)	35 A
Rated current (Use group C / CSA)	35 A	Rated current (Use group D / CSA)	5 A
Reference to approval values	Specifications are maximum values, details - see approval certificate.		

Rated data acc. to UL 1059

Institute (cURus)	CURUS	Certificate No. (cURus)	E60693
Rated voltage (Use group B / UL 1059)	300 V	Rated voltage (Use group C / UL 1059)	300 V
Rated voltage (Use group D / UL 1059)	600 V	Rated voltage (Use group F / UL 1059)	744 V
Rated current (Use group B / UL 1059)	40.5 A	Rated current (Use group C / UL 1059)	40.5 A
Rated current (Use group D / UL 1059)	5 A	Rated current (Use group F / UL 1059)	40.5 A
Creepage distance, min.	9.6 mm	Clearance distance, min.	6.9 mm
Reference to approval values	Specifications are maximum values, details - see approval certificate.		

Packing

Packaging	Box	VPE length	349.00 mm
VPE width	134.00 mm	VPE height	40.00 mm

Important note

IPC conformity	Conformity: The products are developed, manufactured and delivered according international recognized standards and norms and comply with the assured properties in the data sheet resp. fulfill decorative properties in accordance with IPC-A-610 "Class 2". Further claims on the products can be evaluated on request.
Notes	• Additional variants on request • Rated current related to rated cross-section & min. No. of poles. • P on drawing = pitch • Rated data refer only to the component itself. Clearance and creepage distances to other components are to be designed in accordance with the relevant application standards. • In accordance with IEC 61984, OMNIMATE-connectors are connectors without breaking capacity (COC). During designated use, connectors are not allowed to be engaged or disengaged when live or under load • Long term storage of the product with average temperature of 50 °C and maximum humidity 70%, 36 months

Classifications

ETIM 8.0	EC002637	ETIM 9.0	EC002637
ETIM 10.0	EC002637	ECLASS 14.0	27-46-02-01
ECLASS 15.0	27-46-02-01		

SV 7.62HP/05/90MF3 3.5SN BK BX

Weidmüller Interface GmbH & Co. KG
Klingenbergstraße 26
D-32758 Detmold
Germany

www.weidmueller.com

Drawings

Product image

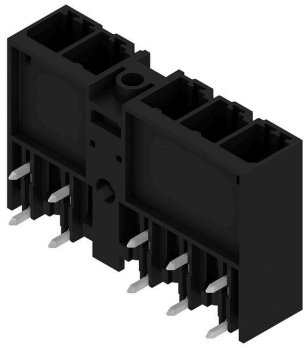

Dimensional drawing

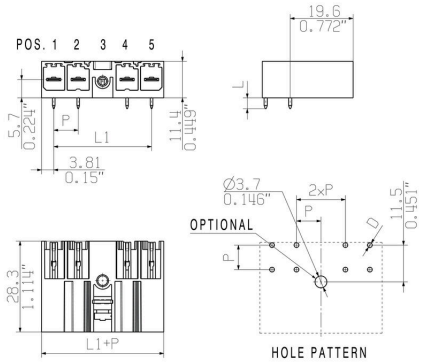

6	M(S)F6	o	o	o	o	o	X	o
6	M(S)F5	o	o	o	o	X	o	o
6	M(S)F4	o	o	o	X	o	o	o
6	M(S)F3	o	o	X	o	o	o	o
6	M(S)F2	o	X	o	o	o	o	o
5	M(S)F5	o	o	o	o	X	o	
5	M(S)F4	o	o	o	X	o	o	
5	M(S)F3	o	o	X	o	o	o	
5	M(S)F2	o	X	o	o	o	o	
4	M(S)F4	o	o	o	X	o		
4	M(S)F3	o	o	X	o	o		
4	M(S)F2	o	X	o	o	o		
3	M(S)F3	o	o	X	o			
3	M(S)F2	o	X	o	o			
2	M(S)F2	o	X	o				
NO OF POLES	X = MIDDLE FLANGE POSITION	1	2	3	4	5	6	7
		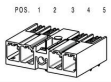						

SV 7.62HP/05/90MF3 3.5SN BK BX

Weidmüller Interface GmbH & Co. KG
Klingenbergstraße 26
D-32758 Detmold
Germany

www.weidmueller.com

Accessories

Coding elements

The pluggable connections for power electronics - optimised for modern drive technologies, e.g. motor starters, frequency converters and servo-controllers. OMNIMATE Power sets the new standard – with increased safety and innovative solutions such as the pluggable shield, integrated signal contacts and one-handed operation.
The three product lines offer you further advantages:

- Application-oriented scalability: from the compact 4 mm² connector for 29 A (IEC) or 20 A (UL) up to the sturdy 16 mm² connector for 76 A (IEC) or 54 A (UL)
- Unlimited usage up to 1,000 V (IEC) or 600 V (UL)
- A variety of application optimised mounting options

Our service:
Design your individual connectors simply by using the product configurator.

General ordering data

Type	BV/SV 7.62HP KO	Version
Order No.	1937590000	PCB plug-in connector, Accessories, Coding element, black, Number
GTIN (EAN)	4032248608881	of poles: 1
Qty.	50 ST	