Data sheet

HDC 16A TSLU 1M20G

Weidmüller Interface GmbH & Co. KG
Klingenbergstraße 26
D-32758 Detmold
Germany

www.weidmueller.com

Product image

IP65 RoHS COMPLIANT

The special die-cast alloy and the multi-layered surface sealing provide complete protection for the HDC housings.
The cleverly designed interlock system is manufactured from stainless steel. This guarantees a long lifespan with high resistance to corrosion and impact.
The housing interlock system provides integrated safety. Our unique, patented spring system provides the housing interlock with a secure grip and prevents accidental opening.
The laser marking allows for easy and quick identification. Each housing is permanently labelled with a laser marking so that each product can be quickly designated and positioned.
Weidmüller RockStar® IP 65 / NEMA Type 4X housings - your first choice for industrial housings with IP 65 protection.

General ordering data

Version	HDC enclosures, Installation size: 5, Protection degree: IP65, in plugged condition, Cable entry from side, Plug housing, End-locking clamp, lower side, Standard, Size of cable entries: M 20
Order No.	1041760000
Type	HDC 16A TSLU 1M20G
GTIN (EAN)	4032248771011
Qty.	1 items

HDC 16A TSLU 1M20G

Weidmüller Interface GmbH & Co. KG
Klingenbergstraße 26
D-32758 Detmold
Germany

www.weidmueller.com

Technical data

Approvals

Approvals	
ROHS	Conform
UL File Number Search	UL Website
Certificate No. (cURus)	E92202

Dimensions and weights

Depth	89 mm	Depth (inches)	3.5039 inch
Height	58 mm	Height (inches)	2.2835 inch
Width	32.5 mm	Width (inches)	1.2795 inch
Net weight	133 g		

Temperatures

Limit temperature	-40 °C ... 125 °C

Environmental Product Compliance

RoHS Compliance Status	Compliant without exemption	
REACH SVHC	No SVHC above 0.1 wt%	
Chemical resistance	Substance	Acetone
	Chemical resistance	Conditionally resistant
	Substance	Drilling oil
	Chemical resistance	Resistant
	Substance	Diesel
	Chemical resistance	Resistant
	Substance	Ethyl alcohol
	Chemical resistance	Resistant
	Substance	Transmission oil
	Chemical resistance	Resistant
	Substance	Hydraulic oil
	Chemical resistance	Resistant
	Substance	Coolant
	Chemical resistance	Resistant
	Substance	Petroleum benzine
	Chemical resistance	Resistant
	Substance	Sweat
	Chemical resistance	Resistant
	Substance	Premium gasoline
	Chemical resistance	Conditionally resistant
	Substance	Water
	Chemical resistance	Resistant
	Substance	UV
	Chemical resistance	Unstable
	Substance	Ozone
	Chemical resistance	Unstable

Dimensions

Cable entry	w. thread	Width housing C	29.5 mm
Total length housing	79 mm	Height of housing B	58 mm

HDC 16A TSLU 1M20G

Weidmüller Interface GmbH & Co. KG
Klingenbergstraße 26
D-32758 Detmold
Germany

www.weidmueller.com

Technical data

General data

Surface finish	Powder coating	Protection degree	IP65, in plugged condition

Version

Number of cable glands	0	Size of cable entries	M 20
Top part/bottom part/lid	upper part	Cover	without cover
Tightening torque	0.5 Nm	Number of cable entry on top	0
Number of cable entry sideways	1	Design of housing	Cable entry from side, Plug housing
Design of locking system	End-locking clamp, lower side	Design	Standard
Installation size	5	Cable entry	w. thread
Type	Plug	Clamp version	End-locking clamp
Sealing	NBR	Internal thread	M 20
Colour (RAL)	RAL 7035	BG	5
Suitable for ModuPlug®	No		

Classifications

ETIM 8.0	EC000437	ETIM 9.0	EC000437
ETIM 10.0	EC000437	ECLASS 14.0	27-44-02-02
ECLASS 15.0	27-44-02-02		

HDC 16A TSLU 1M20G

Weidmüller Interface GmbH & Co. KG
Klingenbergstraße 26
D-32758 Detmold
Germany

www.weidmueller.com

Drawings

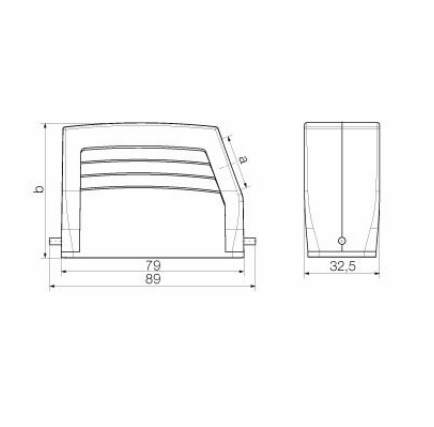

HDC 16A TSLU 1M20G

Weidmüller Interface GmbH & Co. KG
Klingenbergstraße 26
D-32758 Detmold
Germany

www.weidmueller.com

Accessories

Base housing

The special die-cast alloy and the multi-layered surface sealing provide complete protection for the HDC housings.
The cleverly designed interlock system is manufactured from stainless steel. This guarantees a long lifespan with high resistance to corrosion and impact.
The housing interlock system provides integrated safety. Our unique, patented spring system provides the housing interlock with a secure grip and prevents accidental opening.
The laser marking allows for easy and quick identification. Each housing is permanently labelled with a laser marking so that each product can be quickly designated and positioned.
Weidmüller RockStar® IP 65 / NEMA Type 4X housings - your first choice for industrial housings with IP 65 protection.

General ordering data

Type	HDC 16A SLU 2PG16G	Version
Order No.	1665070000	HDC enclosures, Installation size: 5, Protection degree: IP65, in
GTIN (EAN)	4008190421779	plugged condition, Base housing, End-locking clamp, lower side,
Qty.	1 ST	Standard, Size of cable entries: PG 16
Type	HDC 16A SLU 1PG21G	Version
Order No.	1665090000	HDC enclosures, Installation size: 5, Protection degree: IP65, in
GTIN (EAN)	4008190421793	plugged condition, Base housing, End-locking clamp, lower side,
Qty.	1 ST	Standard, Size of cable entries: PG 21
Type	HDC 16A SLU 2M25G	Version
Order No.	1788760000	HDC enclosures, Installation size: 5, Protection degree: IP65, in
GTIN (EAN)	4032248206308	plugged condition, Base housing, End-locking clamp, lower side,
Qty.	1 ST	Standard, Size of cable entries: M 25
Type	HDC 16A SLU 2M20G	Version
Order No.	1788770000	HDC enclosures, Installation size: 5, Protection degree: IP65, in
GTIN (EAN)	4032248206315	plugged condition, Base housing, End-locking clamp, lower side,
Qty.	1 ST	Standard, Size of cable entries: M 20
Type	HDC 16A SLU 1M25G	Version
Order No.	1902330000	HDC enclosures, Installation size: 5, Protection degree: IP65, in
GTIN (EAN)	4032248591916	plugged condition, Base housing, End-locking clamp, lower side,
Qty.	1 ST	Standard, Size of cable entries: M 25

HDC 16A TSLU 1M20G

Weidmüller Interface GmbH & Co. KG
Klingenbergstraße 26
D-32758 Detmold
Germany

www.weidmueller.com

Accessories

Bulkhead housing

The special die-cast alloy and the multi-layered surface sealing provide complete protection for the HDC housings.
The cleverly designed interlock system is manufactured from stainless steel. This guarantees a long lifespan with high resistance to corrosion and impact.
The housing interlock system provides integrated safety. Our unique, patented spring system provides the housing interlock with a secure grip and prevents accidental opening.
The laser marking allows for easy and quick identification. Each housing is permanently labelled with a laser marking so that each product can be quickly designated and positioned.
Weidmüller RockStar® IP 65 / NEMA Type 4X housings - your first choice for industrial housings with IP 65 protection.

General ordering data

Type	HDC 16A ALU	Version
Order No.	1664920000	HDC enclosures, Installation size: 5, Protection degree: IP65, in
GTIN (EAN)	4008190421625	plugged condition, Bulkhead housing, End-locking clamp, lower side,
Qty.	1 ST	Standard, Size of cable entries: none

Coupling housing

The special die-cast alloy and the multi-layered surface sealing provide complete protection for the HDC housings.
The cleverly designed interlock system is manufactured from stainless steel. This guarantees a long lifespan with high resistance to corrosion and impact.
The housing interlock system provides integrated safety. Our unique, patented spring system provides the housing interlock with a secure grip and prevents accidental opening.
The laser marking allows for easy and quick identification. Each housing is permanently labelled with a laser marking so that each product can be quickly designated and positioned.
Weidmüller RockStar® IP 65 / NEMA Type 4X housings - your first choice for industrial housings with IP 65 protection.

General ordering data

Type	HDC 16A KLU 1PG16G	Version
Order No.	1665450000	HDC enclosures, Installation size: 5, Protection degree: IP65, in
GTIN (EAN)	4008190422158	plugged condition, Coupling housing, End-locking clamp, lower side,
Qty.	1 ST	Standard, Size of cable entries: PG 16
Type	HDC 16A KLU 1M25G	Version
Order No.	1788800000	HDC enclosures, Installation size: 5, Protection degree: IP65, in
GTIN (EAN)	4032248206346	plugged condition, Coupling housing, End-locking clamp, lower side,
Qty.	1 ST	Standard, Size of cable entries: M 25

HDC 16A TSLU 1M20G

Weidmüller Interface GmbH & Co. KG
Klingenbergstraße 26
D-32758 Detmold
Germany

www.weidmueller.com

Accessories

Cover

The special die-cast alloy and the multi-layered surface sealing provide complete protection for the HDC housings.
The cleverly designed interlock system is manufactured from stainless steel. This guarantees a long lifespan with high resistance to corrosion and impact.
The housing interlock system provides integrated safety. Our unique, patented spring system provides the housing interlock with a secure grip and prevents accidental opening.
The laser marking allows for easy and quick identification. Each housing is permanently labelled with a laser marking so that each product can be quickly designated and positioned.
Weidmüller RockStar® IP 65 / NEMA Type 4X housings - your first choice for industrial housings with IP 65 protection.

General ordering data

Type	HDC 16A DODL 1LB	Version
Order No.	1665900000	HDC enclosures, Installation size: 5, Protection degree: IP65, in
GTIN (EAN)	4008190422936	plugged condition, Cover for lower part of housing, End-locking
Qty.	1 ST	clamp, lower side, Standard, Size of cable entries: none

IP68 version

In addition to the extensive range of enclosures, Weidmüller offers a variety of cable glands for a wide range of applications.
The cable glands made of brass, plastic and stainless steel meet the most various IP protection classes to suit any industrial enclosure.
Depending on the series of cable glands and the application, the cable glands are approved and tested according to VDE, UL, UR, cULus, DNV GL or EN 45545.

General ordering data

Type	VG M20 - MS 68	Version
Order No.	1772220000	VG MS (standard brass cable gland), Cable glands, straight, M 20, 8
GTIN (EAN)	4032248129874	mm, OD min. 6 - OD max. 12 mm, IP54, IP66, IP67, IP68 - 5 bar (30
Qty.	50 ST	min.), IP69K, Brass, nickel-plated
Type	VG M20 - K 68	Version
Order No.	2811470000	VG K (standard plastic cable gland), Cable glands, straight, M 20, 10
GTIN (EAN)	4064675292227	mm, OD min. 10 - OD max. 14 mm, IP54, IP66, IP67, IP68 - 5 bar (30
Qty.	50 ST	min.), Polyamide 6