Data sheet

AP 45/LI OR 1665

Weidmüller Interface GmbH & Co. KG
Klingenbergstraße 26
D-32758 Detmold
Germany

www.weidmueller.com

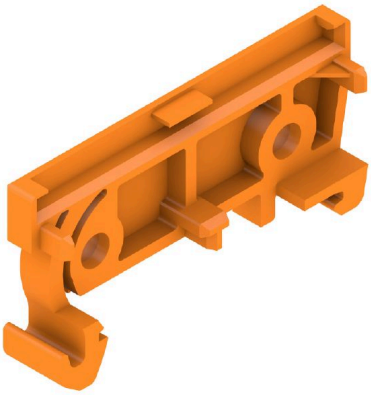

The RS 100 Profi offers you a flexible solution for your mounting needs, as both DIN rail mounting and wall mounting are possible. This versatility facilitates integration into different environments and applications. The housing can be used for the Eurocard PCB standard.
The profile can be cut to size so that you can adapt it precisely to your specific requirements. For particularly heavy components, additional locking feet can be used to improve stability and thus increase the safety of your installation.
Another practical feature is the option of using a cover profile to protect large components.

General ordering data

Version	End plate, RS 45 orange, End plate DIN mounting rail left, Width: 8 mm
Order No.	1011590000
Type	AP 45/LI OR 1665
GTIN (EAN)	4032248723577
Qty.	20 items

AP 45/LI OR 1665

Weidmüller Interface GmbH & Co. KG
Klingenbergstraße 26
D-32758 Detmold
Germany

www.weidmueller.com

Technical data

Approvals

ROHS	Conform

Dimensions and weights

Depth	22.8 mm	Depth (inches)	0.8976 inch
Height	45 mm	Height (inches)	1.7716 inch
Width	8 mm	Width (inches)	0.315 inch
Length	45 mm	Length (inches)	1.7716 inch
Net weight	2.35 g		

Environmental Product Compliance

RoHS Compliance Status	Compliant without exemption
REACH SVHC	No SVHC above 0.1 wt%

Material data

UL 94 flammability rating	V-2	Insulating material	PA 66
Insulating material group	I	Surface finish	untreated
Basic material	PA 66	Comparative Tracking Index (CTI)	600 ≤ CTI

General data

Colour	orange	Protection degree	IP00
Colour chart (similar)	RAL 2000	Encapsulation option	No

Important note

Product information	The article will soon no longer be available. Please do not carry out any further design-ins. The RS 70 and RS 100 profile series can be used as an alternative.

Classifications

ETIM 8.0	EC001031	ETIM 9.0	EC002779
ETIM 10.0	EC002779	ECLASS 14.0	27-19-06-02
ECLASS 15.0	27-19-06-02		

AP 45/LI OR 1665

Weidmüller Interface GmbH & Co. KG
Klingenbergstraße 26
D-32758 Detmold
Germany

www.weidmueller.com
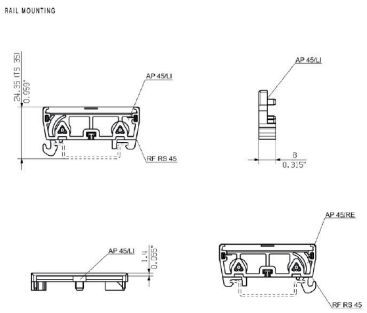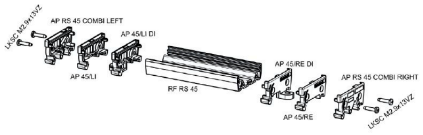
Drawings